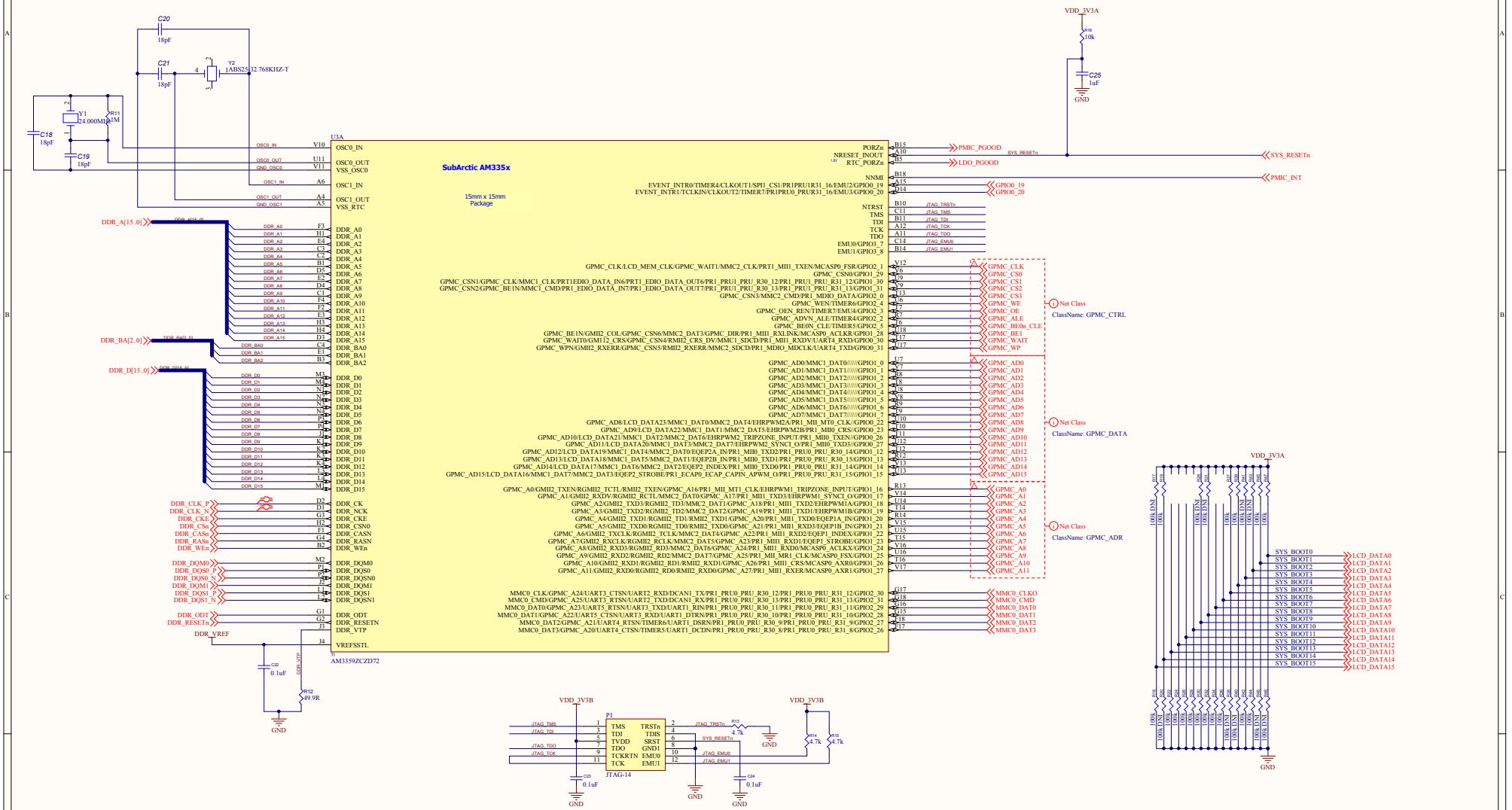
SubArctic AM335x
15mm x 15mm Package
U3A
AM33592CZD72
C20 18pF
C21 18pF
Y2 1ABS25 32.768KHZ-T
Y1 24.000MHz
R11 1M
C18 18pF
C19 18pF
OSC0_IN V10
OSC0_OUT U11
GND_OSC0 V11
OSC1_IN A6
OSC1_OUT A4
GND_OSC1 A5
DDR_A[15..0]
DDR_BA[2..0]
DDR_D[15..0]
DDR_CLK_P
DDR_CLK_N
DDR_CKE
DDR_CSn
DDR_CASn
DDR_RASn
DDR_WEn
DDR_DQM0
DDR_DQS0_P
DDR_DQS0_N
DDR_DQM1
DDR_DQS1_P
DDR_DQS1_N
DDR_ODT
DDR_RESETn
DDR_VREF
DDR_VTP
C22 0.1uF
R12 49.9R
GND
VDD_3V3A
R16 10k
C25 1uF
PMIC_PGOOD
SYS_RESETn
LDO_PGOOD
PMIC_INT
GPIO0_19
GPIO0_20
JTAG_TRSTn
JTAG_TMS
JTAG_TDI
JTAG_TCK
JTAG_TDO
JTAG_EMU0
JTAG_EMU1
Net Class
ClassName: GPMC_CTRL
ClassName: GPMC_DATA
ClassName: GPMC_ADR
MMC0_CLKO
MMC0_CMD
MMC0_DAT0
MMC0_DAT1
MMC0_DAT2
MMC0_DAT3
VDD_3V3B
P1
JTAG-14
R13 4.7k
R14 4.7k
R15 4.7k
C23 0.1uF
C24 0.1uF
SYS_BOOT0
SYS_BOOT1
SYS_BOOT2
SYS_BOOT3
SYS_BOOT4
SYS_BOOT5
SYS_BOOT6
SYS_BOOT7
SYS_BOOT8
SYS_BOOT9
SYS_BOOT10
SYS_BOOT11
SYS_BOOT12
SYS_BOOT13
SYS_BOOT14
SYS_BOOT15
LCD_DATA0
LCD_DATA1
LCD_DATA2
LCD_DATA3
LCD_DATA4
LCD_DATA5
LCD_DATA6
LCD_DATA7
LCD_DATA8
LCD_DATA9
LCD_DATA10
LCD_DATA11
LCD_DATA12
LCD_DATA13
LCD_DATA14
LCD_DATA15
100k DNI
beagleboard.org
Title
Size
Document Number
Rev
Date:
Sheet R50 of

beagleboard.org

Title

Size	Document Number	Rev

Date: Sheet C99 of

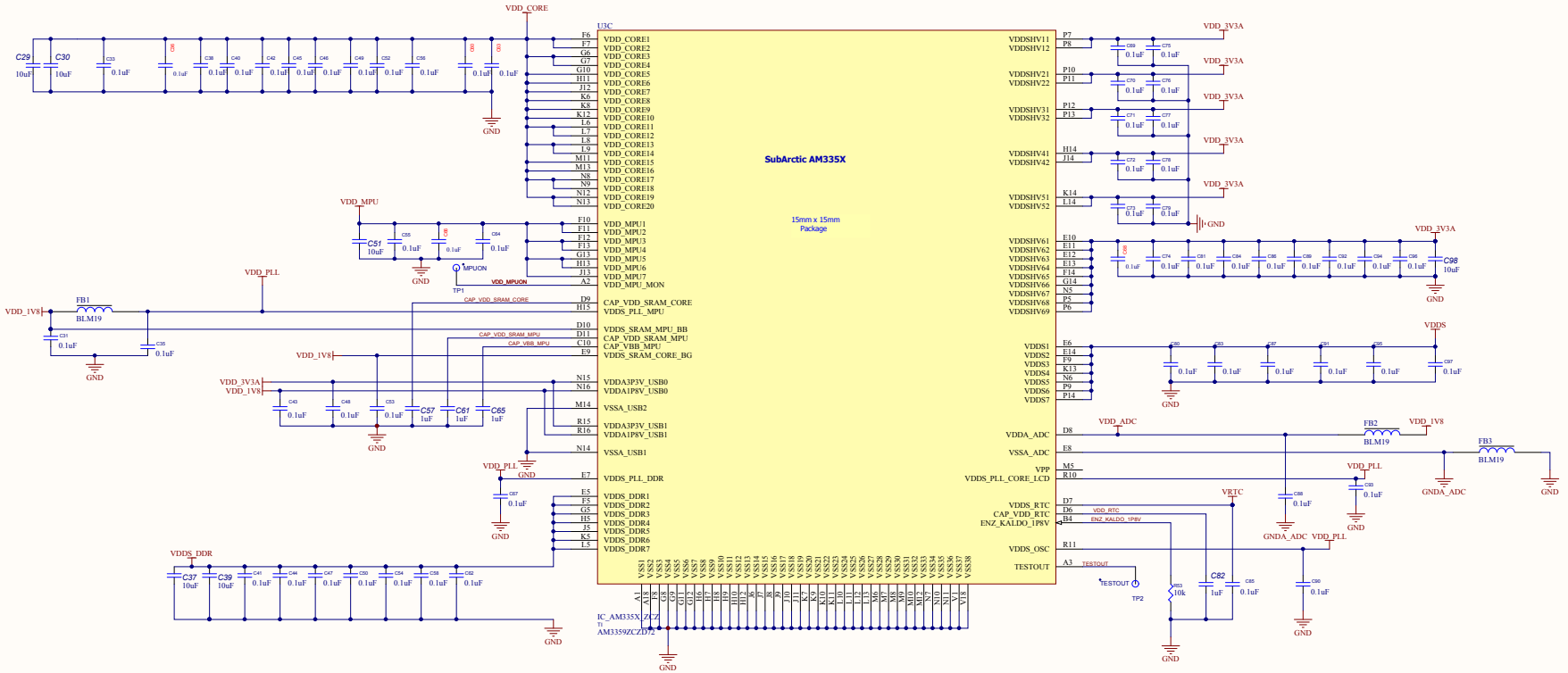

beagleboard.org

Title

Size | Document Number | Rev

Date: | Sheet of

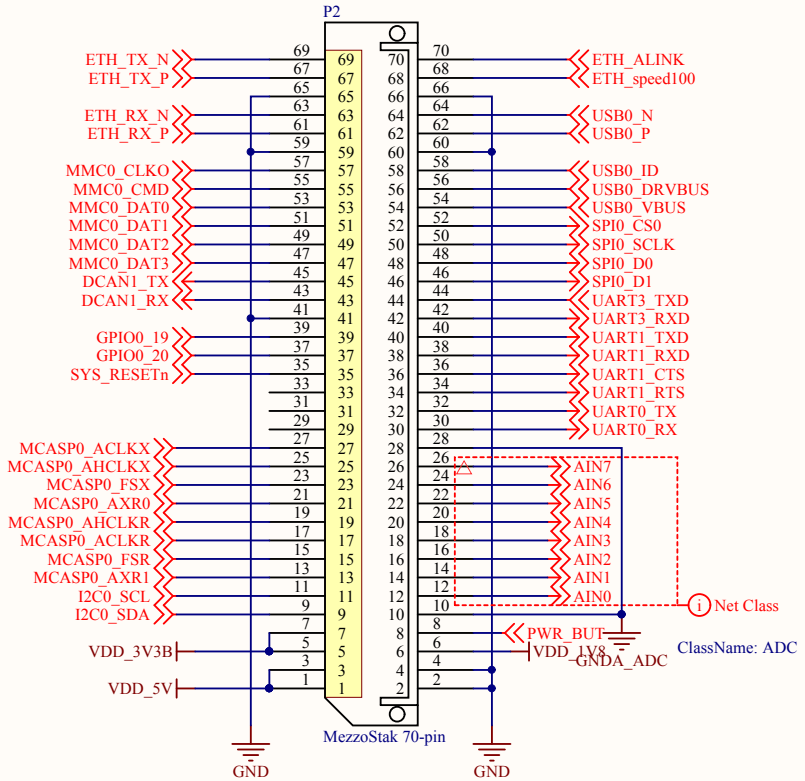

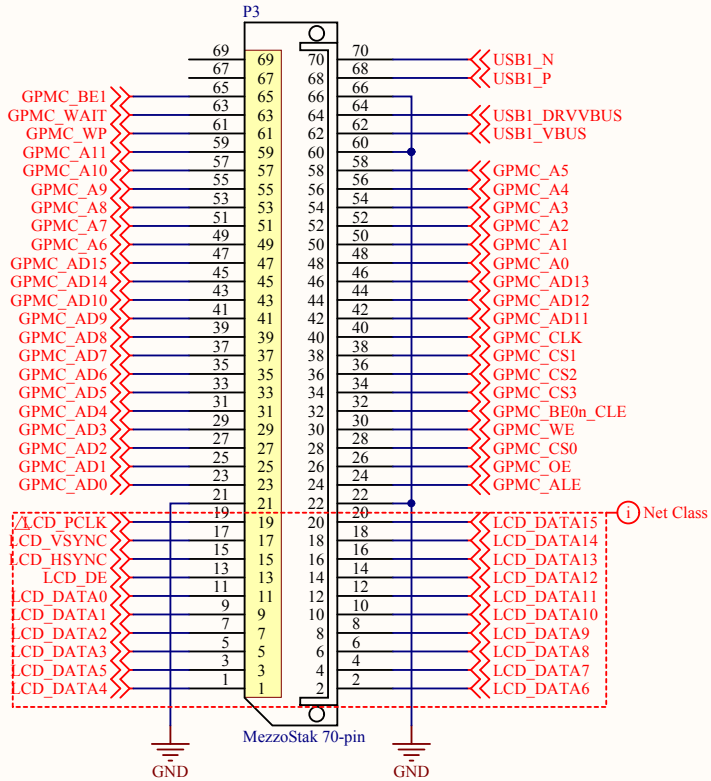

Title		
Size A4	Number	Revision
Date: 10.09.2013		Sheet of
File: G:\Projects\..\07_Connector.SchDoc		Drawn By: